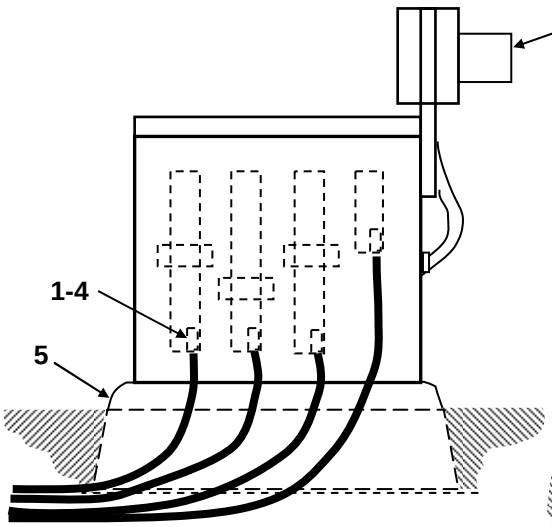

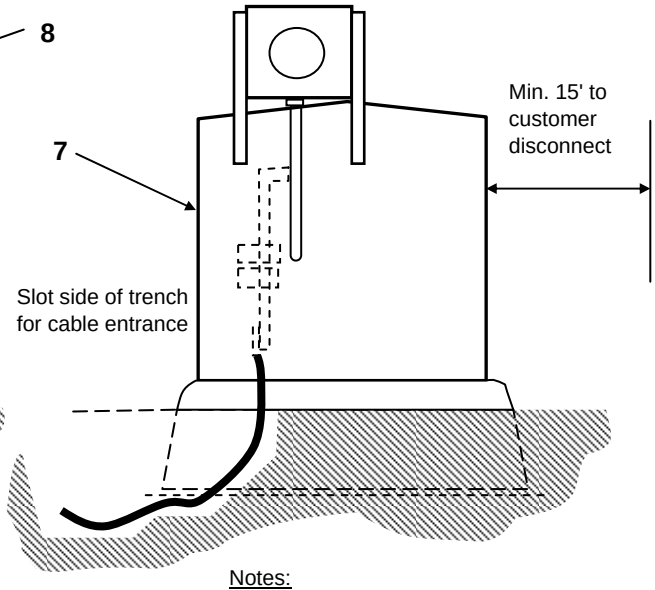

Compact area on which sleeve is set

Meter Cabinet Footprint 72" x 54"

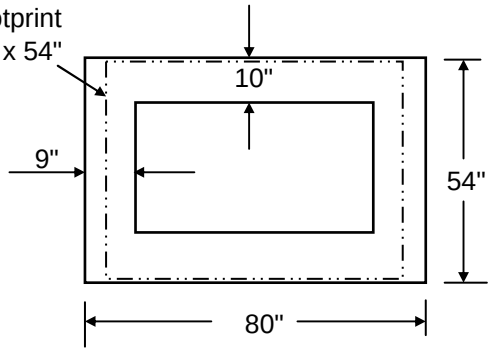

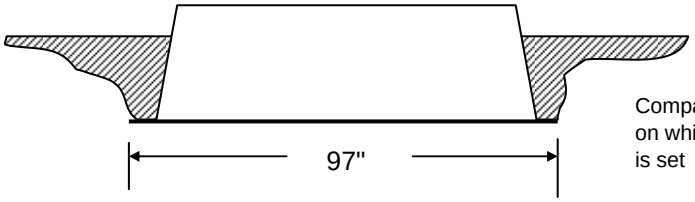

Compact area on which sleeve is set

Notes:
1. See VG3.4R for typical overhead platform.
2. Run conduit as required.
4. Ground per RUS UM48-65 with 8' grounding rods.

MATERIALS LISTING

ITEM	DESCRIPTION	QTY 2000A	QTY 4000A		UNIT	PREC #
1	1/2" x 2 1/4" Bolt	16	16		Ea.	9851
2	Flat Washer	24	24		Ea.	9863
3	Lock Washer	16	16		Ea.	9882
4	Hex Nut	16	16		Ea.	9872
5	NEMA Spade, Burundy Copper Crimp	16	16		Ea.	?
6	Ground Sleeve - Three Phase	1	1		Ea.	8107
7	3000A CT Cabinet w/Meter Transocket Mounted	1	1		Ea.	
8	Form 9S/8S Class 20 120V or 120-480V 3Ø IR Meter	1	1		Ea.	

Design Parameters:
> See design notes above.
>Quad runs 750 USE-2 Cu (535A/ph rating) recommended for 250kV installation. 500kV installation will require special project.

120/208V 2000A to 3000A - 250 & 500kVA Transformers
Underground to 4-Wire Instrument Rated Meter Mounted on CT Enclosure

5/13/2008
Rev. 0

POWDER RIVER ENERGY CORPORATION

UM8.7-20IR